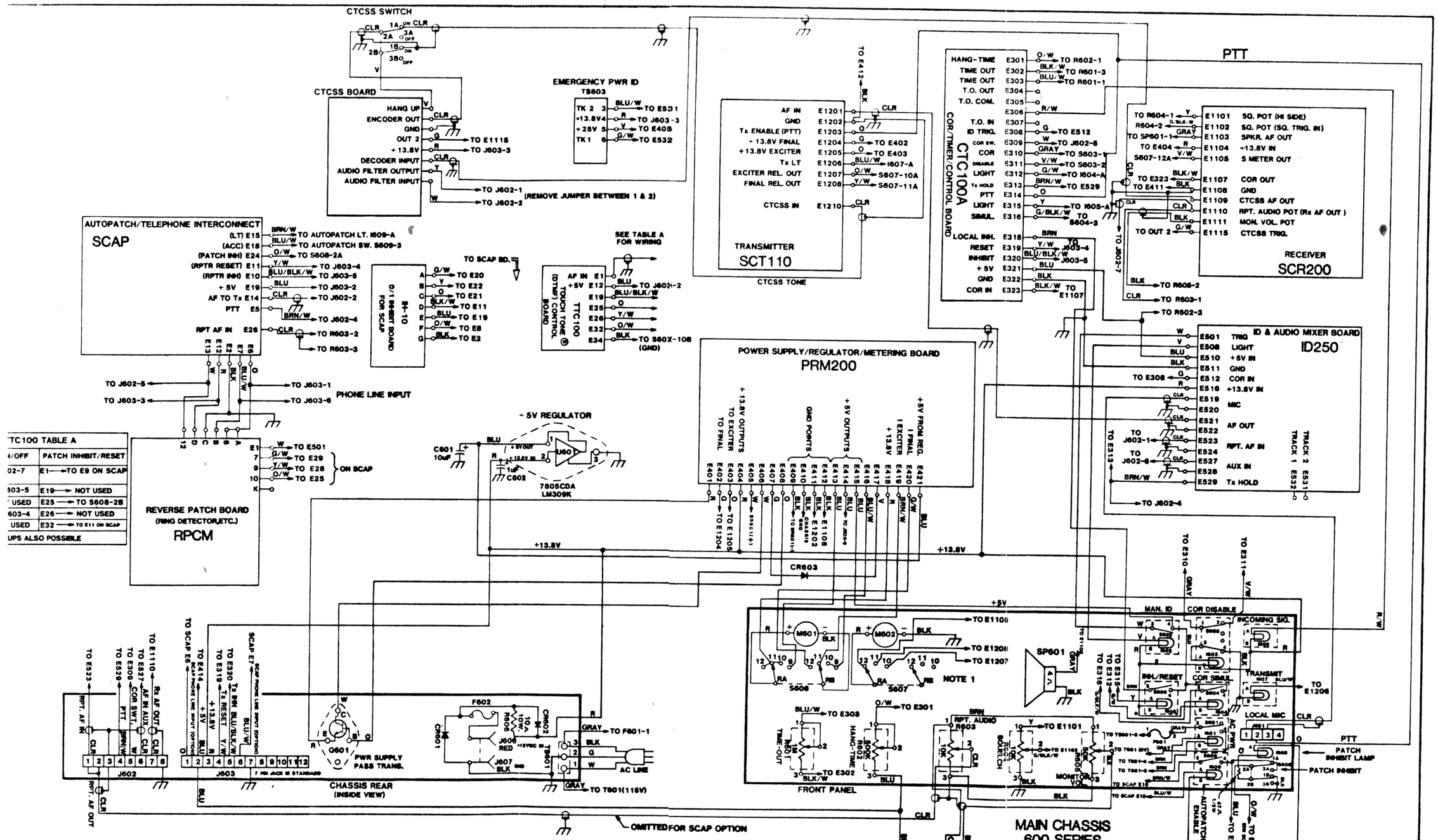

S606 & S607 TERMINALS WITH 'A' SUFFIX ARE FRONT DECK; TERMINALS WITH 'B' SUFFIX ARE REAR DECK.

WIRE COLOR CODES ARE SHOWN NEXT TO TERMINAL NUMBERS.

Ⓡ - "TOUCH TONE" IS A REGISTERED TRADEMARK OF AT & T.

SPECTRUM COMMUNICATIONS

DATE 12-17-80	1/7/81	R.L.A. 7-9-81

SCR1000 INTERCONNECTION DIAGRAM

4300107

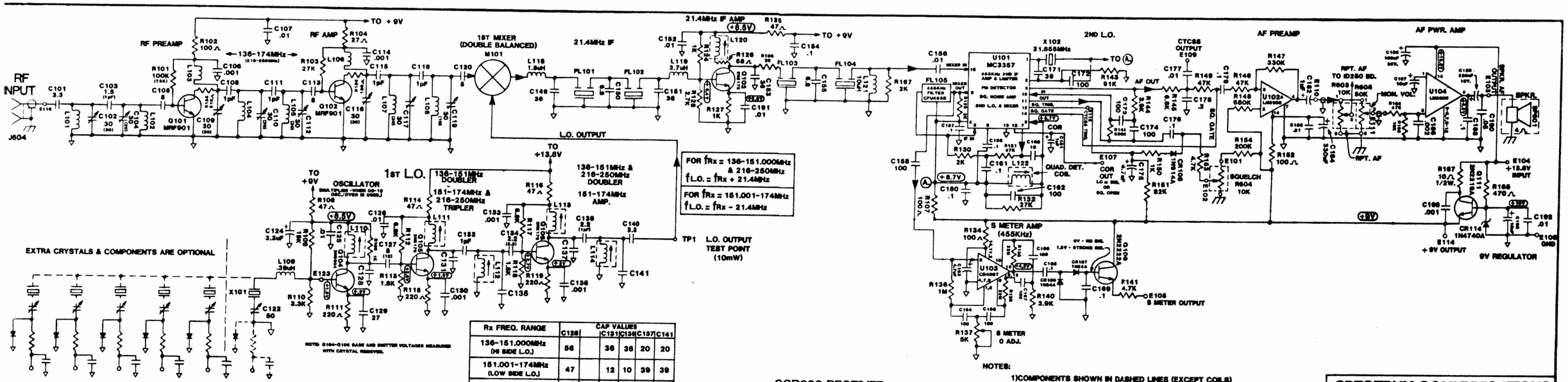

Rx FREQ. RANGE	CAP VALUES C128	C131	C136	C137	C141
136-151.000MHz (HI SIDE L.O.)	56	36	36	20	20
151.001-174MHz (LOW SIDE L.O.)	47	12	10	39	39
216-250MHz (HI SIDE L.O.)	39	10	12	6.8	6.8

SCR200 RECEIVER

NOTES:

1) COMPONENTS SHOWN IN DASHED LINES (EXCEPT COILS) ARE LOCATED OFF THE BOARD.
2) ARROWS SHOW DIRECTION OF SIGNAL FLOW.
3) EXCEPT AS INDICATED, DECIMAL VALUES OF CAPACITANCE ARE IN MICROFARADS (uF); OTHERS ARE IN PICOFARADS (pF).
4) ( ) DENOTES VALUE CHANGES FOR 216-250MHz.

SPECTRUM COMMUNICATIONS

DATE 12-22-80 | APPROVED BY | DRAWN BY R.L.A.

VHF REPEATER RECEIVER

DRAWING NUMBER 4100100A

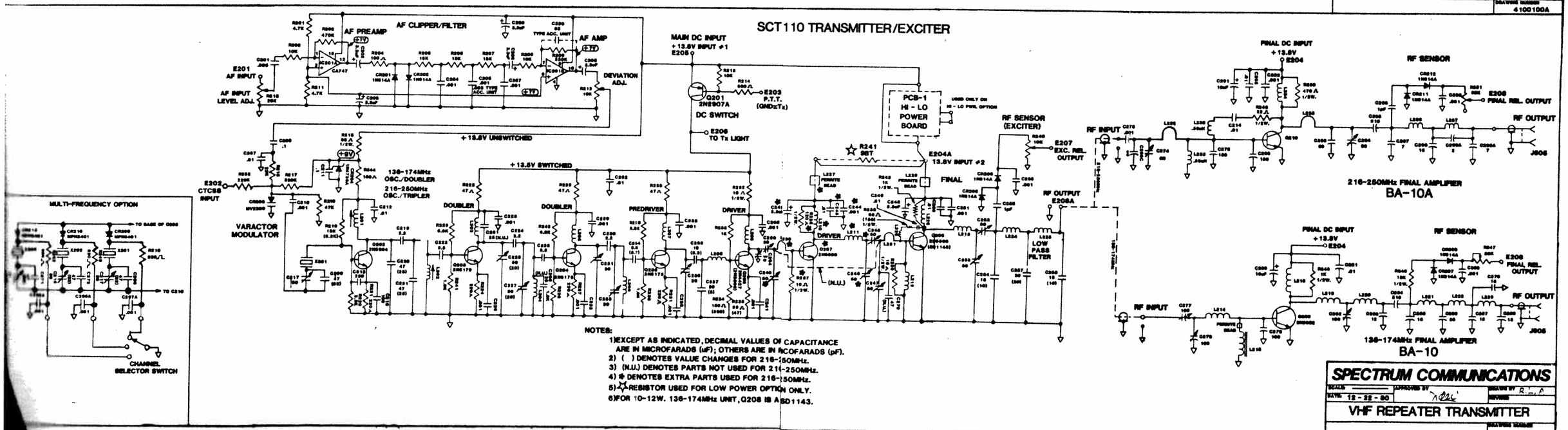

NOTES:

1) EXCEPT AS INDICATED, DECIMAL VALUES OF CAPACITANCE ARE IN MICROFARADS (uF); OTHERS ARE IN PICOFARADS (pF).
2) ( ) DENOTES VALUE CHANGES FOR 216-250MHz.
3) (N.U.) DENOTES PARTS NOT USED FOR 216-250MHz.
4) ✱ DENOTES EXTRA PARTS USED FOR 216-250MHz.
5) ☆ RESISTOR USED FOR LOW POWER OPTION ONLY.
6) FOR 10-12W. 136-174MHz UNIT, Q208 IS ASD1143.

SPECTRUM COMMUNICATIONS

DATE 12-22-80 | APPROVED BY | DRAWN BY R.L.A.

VHF REPEATER TRANSMITTER

DRAWING NUMBER 4100100A